ZONE	SYMBOL	REVISION	APPROVAL	DATE
		ADD RoHS	J.X.KUANG	19-9-2006

RoHS Compliant

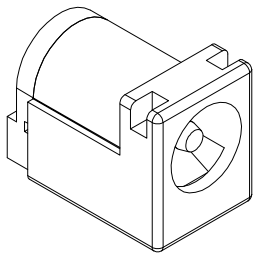

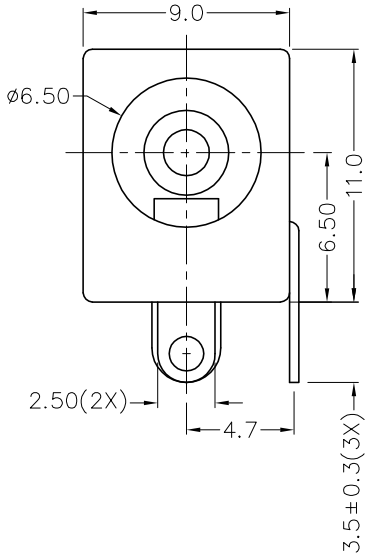

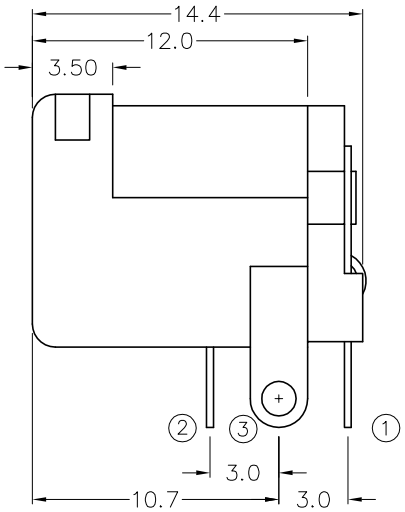

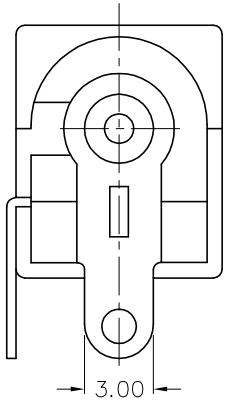

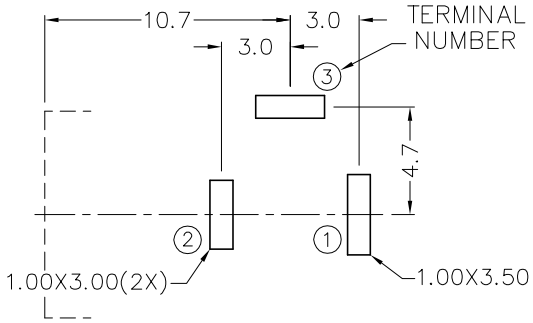

PCB LAYOUT
(BOTTOM VIEW)

MODEL NO.	TDC-002-1
SCHEMATIC	1, 3, 2
CENTER PIN	ø1.45mm
	ø1.65mm
	ø2mm
	ø2.5mm

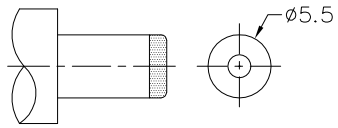

DC MATE PLUG

* MATERIAL

CENTRE PIN : COPPER
TERMINAL 1 : BRASS
TERMINAL 2 : COPPER ALLOY
TERMINAL 3 : BRASS
HOUSING : PBT
COVER : PBT

TECHNIK INDUSTRIAL CO.LTD.

			DESIGN	T.Y.LI	DATE	18-10-2005	SCALE	3:1
			DRAWING	L.L.ZHANG	DATE	19-9-2006	MATERIAL	*
PART NAME	DC POWER SOCKET	TOLERANCE UNLESS OTHERWISE SPECIFIED: 0.0±0.2 0.00±0.1 0.000±0.05 UNIT: mm	CHECK		DATE		DWG. NO.	TZ\DC002-1-PBT/E
PART NO.	TDC-002-1		APPROVAL		DATE		SHEET	

DCF-04/A